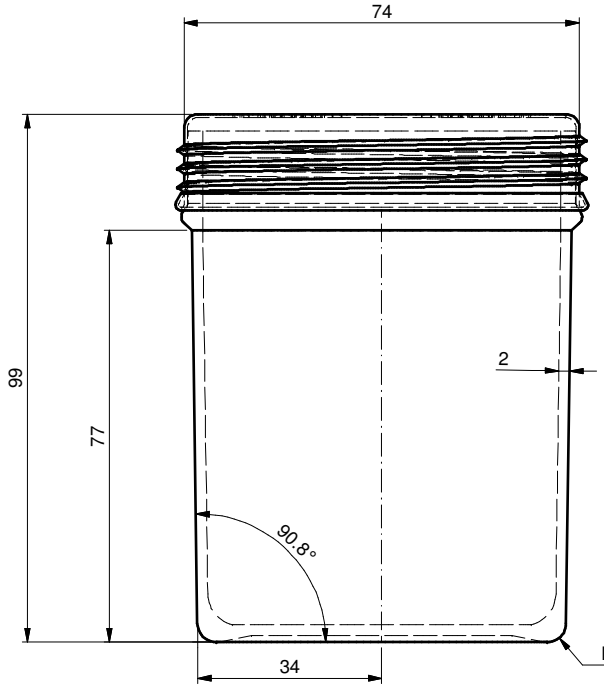

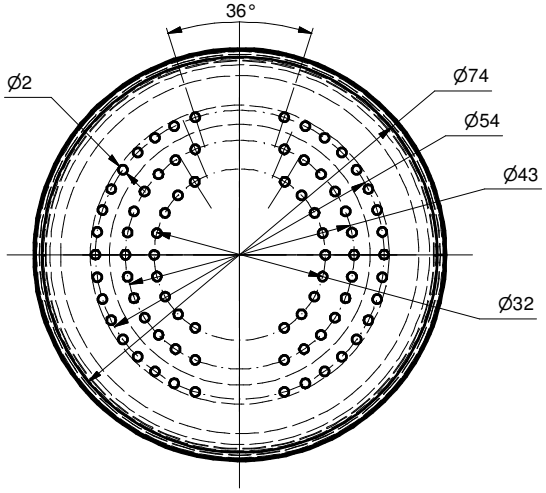

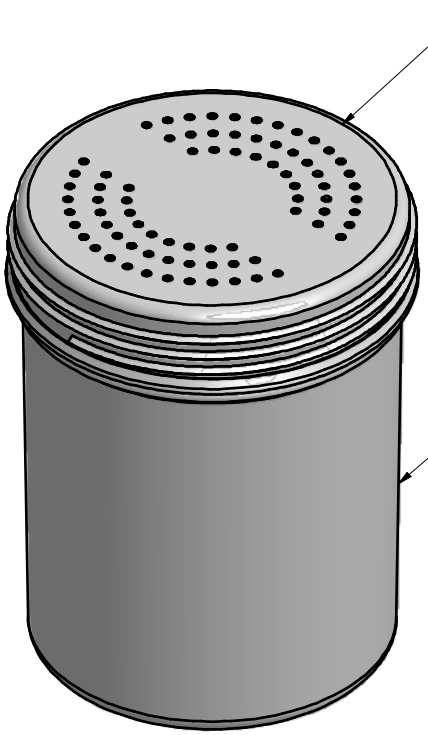

透明ABS,材料必需NSF或FDA认证
Plastic Body(Clear)
Material:ABS
P/N:3990079-1

Notes:
1、不锈钢盖与塑料罐装配时无刺耳声音;
2、拆卸不锈钢盖时无黑色粉沫;
3、不锈钢盖与塑料罐可以互配.

APPROVED DRAWING

APPROVED BY:	
DATE:	

TOLERANCES:		
GENERAL:X MM	± 1.0	MM
X.X MM	± 0.5	MM
X.XX MM	± 0.2	MM
HOLES:	± 0.15	MM
ANGLES:	± 1	°

MATERIAL LIST			Chermical Composition(%)				
	THICKNESS / GAGE	MATERIAL CODE	C (%)	Mn (%)	Si (%)	Cr (%)	Ni (%)
1							
2							
3							

Unstated Tolerances 未注明公差

Linear:(DIN ISO 2768 T1)						Angular DIN6935		
>	≤	F 精确	M 中等	E 粗糙	V 超粗糙			
0.5	3	±0.05	±0.1	±0.2	----			
3	6	±0.05	±0.1	±0.3	±0.5	>	≤	
6	30	±0.1	±0.2	±0.5	±1.0	0°	30°	±2°
30	120	±0.15	±0.3	±0.8	±1.5	30°	50°	±1°45'
120	400	±0.2	±0.5	±1.2	±2.5	50°	80°	±1°30'
400	1000	±0.3	±0.8	±2.0	±4.0	80°	120°	±1°15'
1000	2000	±0.5	±1.2	±3.0	±6.0	120°	0°	±1°

思特乐 Stainless Products
USA/中国 1-800-830-5420
www.bucketofsteam.com

Confidential:All the information contained herein is confidential and isintended for use solely for the benefit of Stainless products Ltd. Transmission of all or part of this information for others or use by you for other purposes is unauthorized without the written consent of Stainless Products Ltd.

TITLE
Salt Can,Clear

DRAWING NO.
5003088

SUB-TITLE
CH

REV.

REV.-DESCRIPTION

APP BY: Joy

DATE

PART NO.

DRAWN BY: Joy

DATE: 2009-3-3

SCALE: 1:1

FORMAT: B-A3

UNIT: MM

ISSUE

FINISH:

Purchase No.